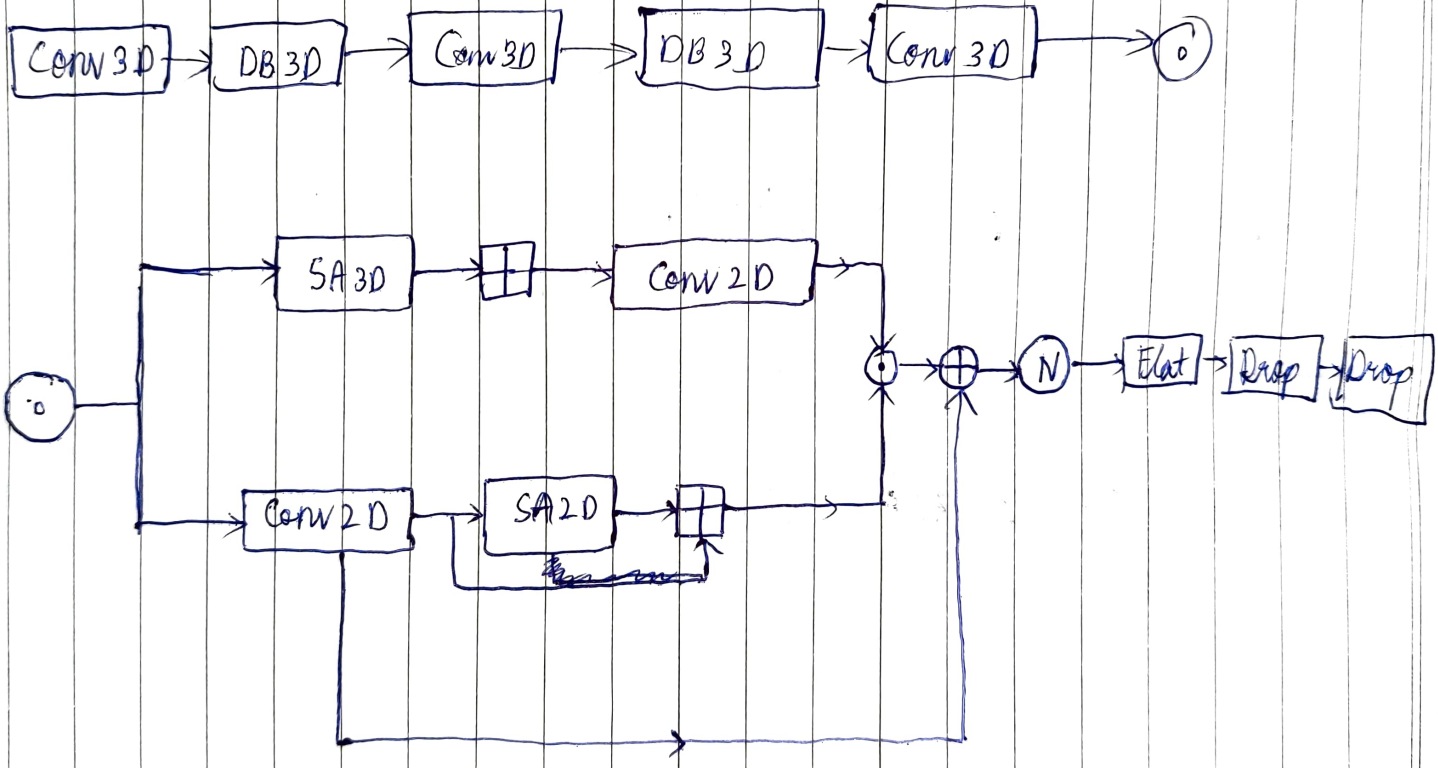

⊕ element-wise summation

⊞ concatenation attention

⊙ cross attention

Ⓝ Normalization layer